Ceiling Mounted Ventilation Fan(Duct Type)

BPT Series

Quiet & Fresh as in Deep Forest

Super quiet, long ventilation distance
Feel nature at home
Out of your expectation

Semimetal Series

BPT10-21J BPT10-24JL
BPT10-24JH BPT15-27JL
BPT15-27JH BPT15-32J

Plastic Series

BPT10-21S BPT10-24SL
BPT10-24SH BPT15-27SL
BPT15-27SH BPT15-32S

Performance Table

Type	Model (No)	Voltage (V)	Frequency (Hz)	Power (W)	Volume (m^3/h)	Static Pressure (Pa)	Noise (dB)	Duct Size Φ (mm)	Applicable Area (m^2)	Net Weight (kg)
Semimetal Series	BPT10-21J	220~240	50/60	25	150	100	33	100	6~12	2.8
	BPT10-24JL	220~240	50/60	30	200	110	35	100	8~16	3.2
	BPT10-24JH	220~240	50/60	35	250	120	39	100	10~20	3.2
	BPT15-27JL	220~240	50/60	45	300	120	33	150	12~24	4.2
	BPT15-27JH	220~240	50/60	48	380	150	37	150	15~30	4.2
	BPT15-32J	220~240	50/60	55/50	550/450	150/120	42/37	150	18~44	5.6
Plastic Series	BPT10-21S	220~240	50/60	25	150	100	33	100	6~12	1.7
	BPT10-24SL	220~240	50/60	30	200	110	35	100	8~16	1.9
	BPT10-24SH	220~240	50/60	35	250	120	39	100	10~20	1.9
	BPT15-27SL	220~240	50/60	45	300	120	33	150	12~24	2.5
	BPT15-27SH	220~240	50/60	48	380	150	37	150	15~30	2.5
	BPT15-32S	220~240	50/60	55/50	550/450	150/120	42/37	150	18~44	3.5

Applicable area calculation is based on essential ventilation of 5–10 times /hour in normal living room.

Overall and Installation Dimension

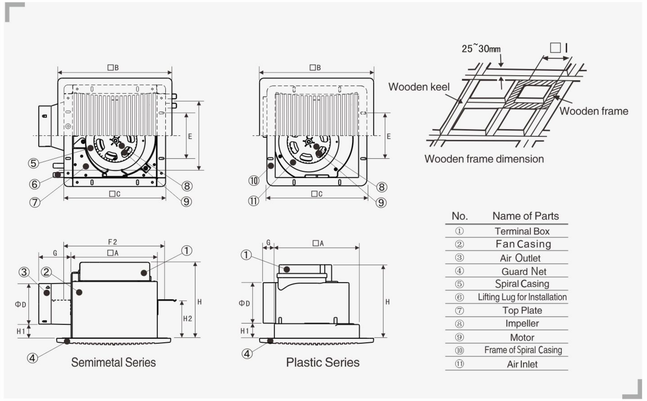

Unit: mm

Model	A	B	C	ΦD	E	F1	F2	G	H	H1	H2	Frame Size
BPT10-21J	205	275	246	100	110	168	300	80	185	35	93	215X215
BPT10-24JL/H	230	298	271	100	140	193	275	80	185	35	93	240X240
BPT15-27JL/H	260	330	301	150	140	223	305	80	220	35	110	270X270
BPT15-32J	310	380	351	150	190	273	355	80	220	35	110	320X320
BPT10-21S	205	275	241	100	110	—	—	22	180	35	—	215X215
BPT10-24SL/H	234	298	270	100	140	—	—	22	180	35	—	240X240
BPT15-27SL/H	264	330	300	150	140	—	—	22	210	35	—	270X270
BPT15-32S	314	380	350	150	190	—	—	22	210	35	—	320X320

1. 24 series matches 300*300 integrated ceiling perfectly.
2. Wooden keel dimension: 25–30mm.
3. Wooden frame size: take plus tolerance +3mm.

Performance Curve

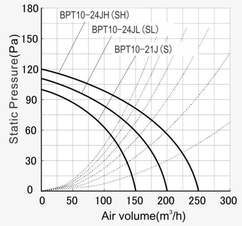

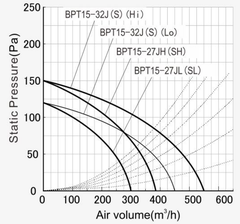

Performance Curve

The curve "_____" in picture is the pipeline pressure lose reference curve of 5m/10m/15m/20m/25m/30m.

Parameters of air volume, power and noise are acquired under the static pressure of 0 Pa.

Air volume and static pressure is acquired from own testing center, which may lead to ±10% difference.

Noise value of the sample is the average value of result acquired at 1m from the left, right and downward side of the sample. This may lead to +3dB difference.